Alle Rechte vorbehalten/ *All rights reserved*

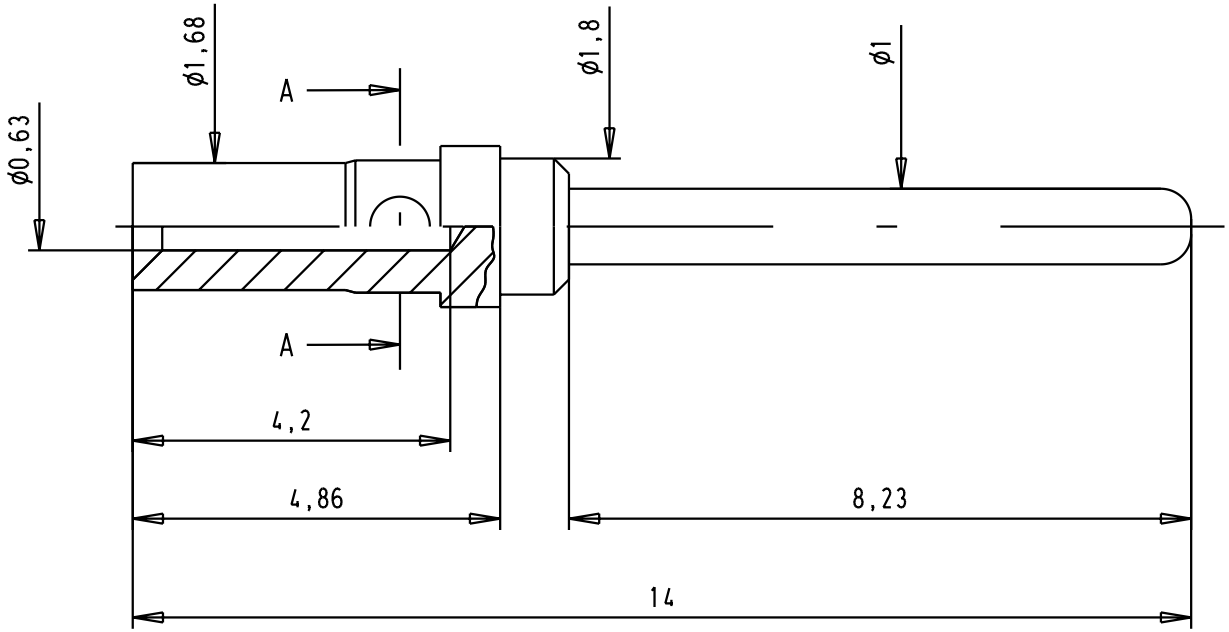

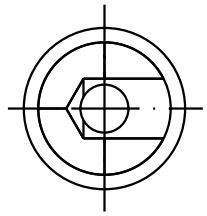

crimping of AWG 26-28: hand tool with positionner 09 99 000 0505

09692827311	0,2 µm Au			
09692825311	0,8 µm Au	31062	18-JUL-02	CV
Part number	Gold plating (over Nickel)	Mod.	Dat.	Name

	Dat.	Name
Detail.	18-JUL-02	CV
Insp.		
Stand.		

All Dim. in mm
Orig. Size DIN A 4

HARTING EURL
F-95972 Paris

Male turned signal contact, with crimp termination for AWG 26-28

TB 0969282x311

Sub.

Maßstab/ *Scale* 10:1

Blatt/ *Page* 1/1