Identification	Cable entry	Part number	Drawing Dimensions in mm
Han A® , Surface mounted housings, top entry, bottom closed 	1xM20	19 20 003 1252	
Han A® , Cable to cable housings, top entry 	1xM20	19 20 003 1750	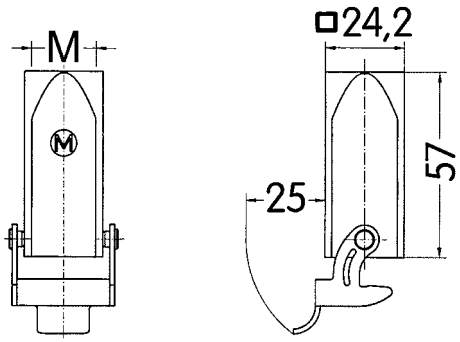
Han A® , Protection cover for cable to cable housings, for mounted female insert or for mounted Han-Brid® insert, metal, with securing flex, with sealing 		09 20 003 5427	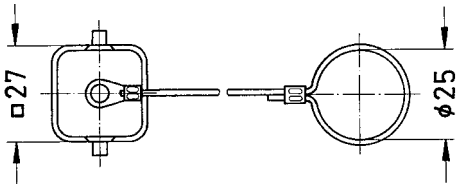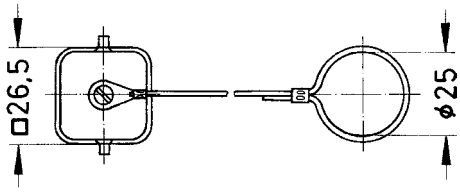
Han A® , Protection cover for cable to cable housings, metal, with securing flex 		09 20 003 5428