PRODUCT NUMBER
54772–101–22LF

- RoHS COMPATIBLE, SEE NOTE 4
- TOTAL NBR OF POSITIONS
- VERSION
- PLATING
  0.76µm GOLD/GXT ON CONTACT AREA
  2µm MIN MATTE TIN ON TAIL

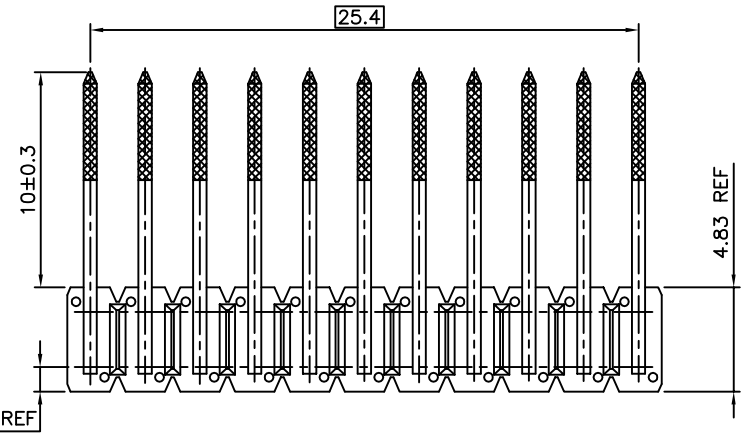

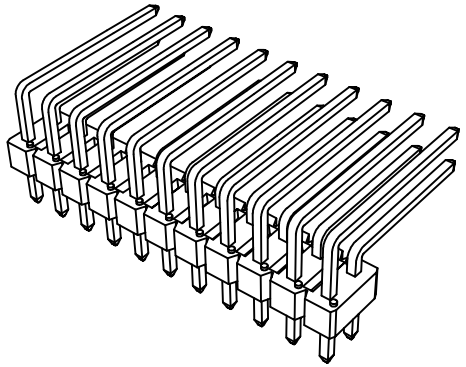

NOTES:

1 – HOUSING MAT'L : HIGH TEMPERATURE THERMOPLASTIC. UL94V–0 COLOR: BLACK

2 – PIN MATERIAL : PHOSPHOR BRONZE

3 – STANDARD PACKAGING IN BLIBOX

4. RoHS COMPATIBLE PRODUCT SPECIFICATIONS

a – PLATING:
– "LF" MEANS THE PRODUCT IS LEAD–FREE,

b – MANUFACTURING PROCESS COMPATIBILITY
– THE HOUSING WILL WITHSTAND EXPOSURE TO 260°C ±5°C SOLDER BATH TEMPERATURE FOR WITH A 1.6mm MIN THICK CIRCUIT BOARD.

c – LABELING:
– MEETS PACKAGING SPECS AS PER GS–14–920

d – LEGAL STATEMENT: SEE GS–47–0004

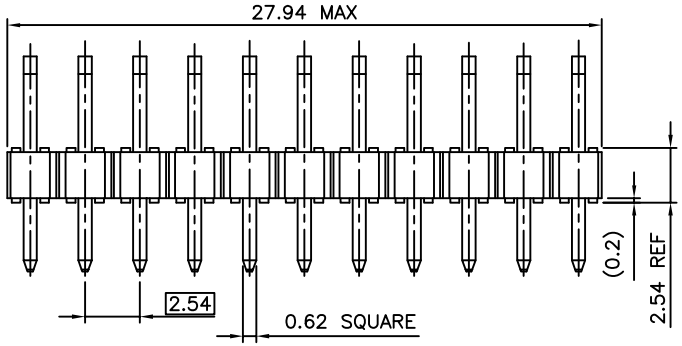

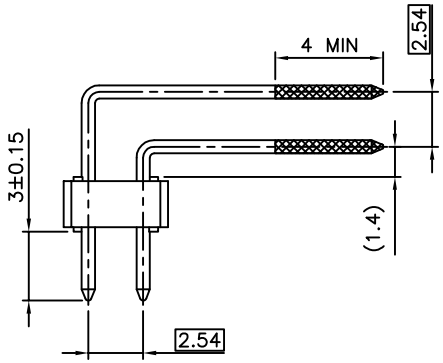

mat'l. code				surface	tolerance	projection	product family
SEE NOTE				ISO 1302	ISO 406 ISO 1101		BERGSTIK
ltr	ecn no	dr	date	tolerances unless otherwise specified			title
A	F20306	LMU	02.04.30	angles	linear	mm	UNSHR,HDR,DR INVERTED PLATING
B	F06–0207	LMU	06.07.27				
C	F08–0148	RTR	08.03.31			scale 1:1	
D	B–19264	LMU	14.11.03	dr	L.MULIN	02.04.30	dwg no / sheet 1 of 1 / size
				engr	J.COMPAGNON	02.04.30	54772 / A3
				chr			
				appd	JM.C	02.04.30	type: CUSTOMER Drawing
sheet index	revision sheet						

form: A3

Copyright FCI
FCIconnect.com
PDS: Rev :D STATUS:Released Printed: Nov 05, 2014