THIS COPY IS PROVIDED ON A RESTRICTED BASIS AND IS NOT TO BE USED IN ANY WAY DETRIMENTAL TO THE INTERESTS OF PANDUIT CORP.

PANDUIT PART NO.	MATERIAL	PACKAGE QTY.	LENGTH "L" ±.02(.5)	WIDTH "W" ±.02(.5)
MT338W21-Q	304 SS.	25	3.38 (85.9)	2.13 (54.1)
MTB338W21-Q	BRASS	25	3.38 (85.9)	2.13 (54.1)
MT350W17-Q	304 SS.	25	3.50 (88.9)	1.73 (43.9)
MTB350W17-Q	BRASS	25	3.50 (88.9)	1.73 (43.9)

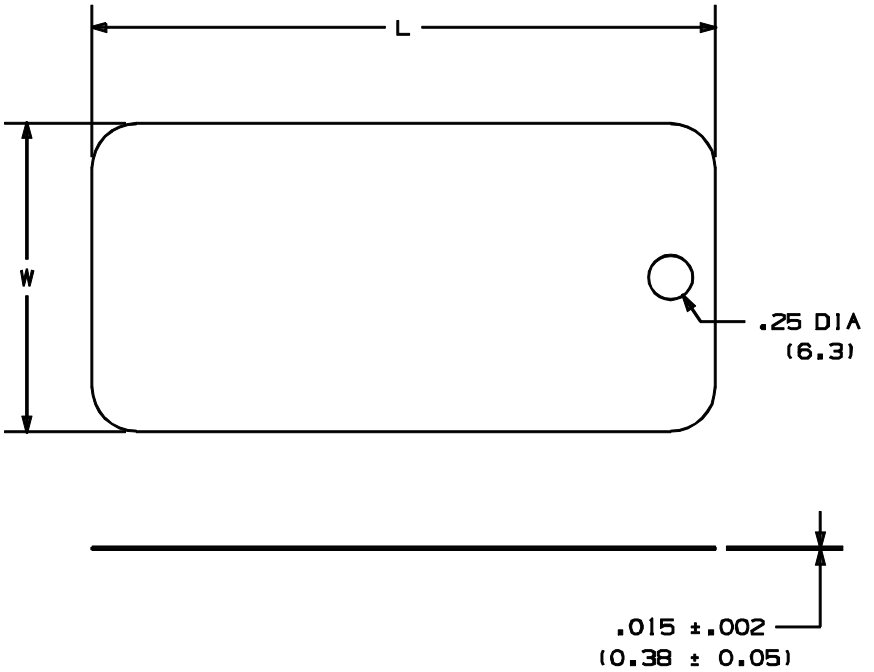

NOTES:

1. DIMENSIONS IN () ARE IN mm.
2. CUSTOM PERMANENT MARKING AVAILABLE. CONSULT FACTORY.

S41099_00

REV	DATE	BY	CHK	DESCRIPTION	ECN #	PM	CUST
00	3/98	TM		DWG. RELEASED			

PANDUIT CORP. TINLEY PARK, ILLINOIS

RECTANGULAR 1-HOLE STAINLESS AND BRASS METAL TAGS

DRAWN BY	CHK'D	SCALE	DRAWING NO.
TSMA		N/A	S41099