Alle Rechte vorbehalten/ *All rights reserved*

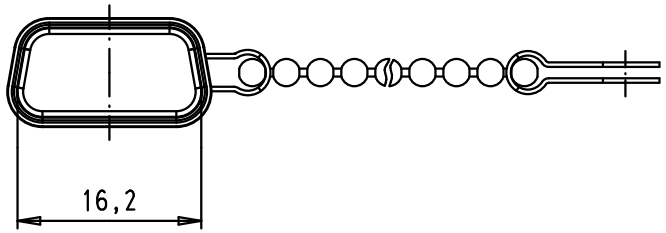

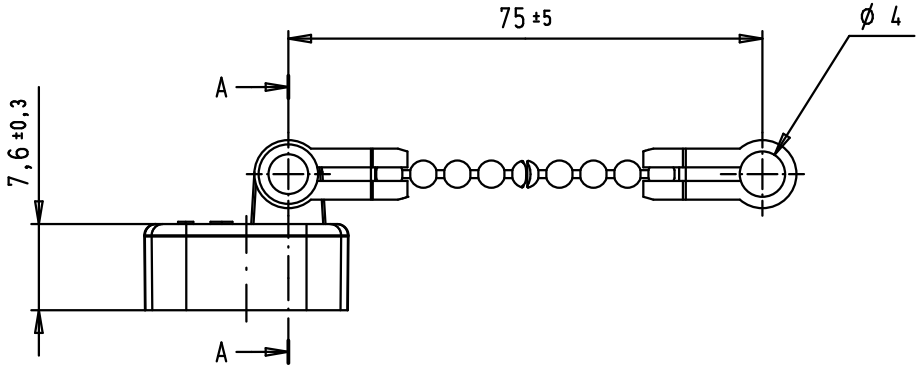

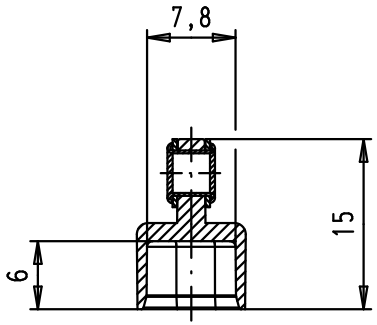

Section A-A

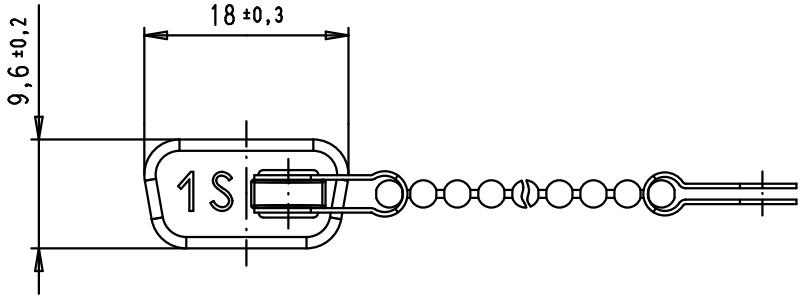

				Dat.	Name
			Detail.	18/12/07	PK
			Insp.		
34892	13/03/08	PK	Stand.		
34797	14/01/08	PK			
34783	18/12/07	PK			
Mod.	Dat.	Name			

All Dim. in mm
Orig. Size DIN A 4

Nickel plated plastic dust cap with chain, female, 9 poles

Maßstab/ *Scale* 1,5:1

HARTING EURL
F-95972 Paris

TB 09 67 009 0715

Sub.

Blatt/ *Page* 1/1